Centralized Lubrication Systems

PE-60, 70, 80 Series

Automatic Lubricator

Operation Manual

Thank you for purchasing Trico Corporation centralized lubrication system. For proper operation, please read the operation manual carefully to avoid incorrect operation and damage.

Contents

1. Safety Information

Please read the operation manual carefully to avoid incorrect operation and damage.

1-1 Application

Trico Corporation centralized lubrication systems are designed for the mechanism lubrication like, bearing, guide way, drum, gear, chain,….. and so on. ◦

Trico Corporation be applied for lubrication on industrial machinery like, lathe, milling machine, press machine, grinding machine,….. and so on.

PE-60,70,80 series have to cooperate with piston distributors and depressurization device. Under the lubrication, the piston distributor lubricates at steady flow rate in every cycle.

1-2 Intended Use

Remark: Trico Corporation centralized lubrication systems are must only be used for their intended purpose and in accordance with the specification and installation instructions for the product in question. Products of Trico Corporation centralized lubrication systems must not be used in conjunction with fluids, group I(hazardous fluids), according to the definition of article 2 paragraph 2 of the Directive 67/548/EC dtd. 27thg June, 1967; and are not approved for application with such fluids.

None of the products of Trico Corporation can be used with gases, liquefied gases, gases dissolved under pressure, steams or fluids that will reach a stream pressure more than 0.5 bar above the normal atmospheric pressure in the permissible application temperature range. Unless otherwise noted, products of Trico Corporation must not be used in conjunction with explosive atmospheres according to the ATEX-Directive 94/9/EC.

1-3 Authorized personnel

The installation, operation, repair, and maintenance need to be done by qualified experts. They have been trained and familiar with the end products into which the lubrication systems are installed. Qualified experts should be able to carry out the required tasks and to recognize and to avoid any danger might occur. A definition of what constitutes a qualified person and who are unqualified persons are stipulated in DIN VDE 0105 and IEC 364.

1-4 Danger relating to electric current

The electrical connection for centralized lubrication systems need to be done by qualified experts. All local electrical operating conditions such as DIN and VDE must be observed. Damages to persons and property could be resulted by improperly connected installation.

DANGER! Working on products that have not been disconnected from the power supply can cause serious injury or death to persons. Installation, maintenance, and repair work may

only be carried out by qualified experts on products that have been disconnected from the power supply. The supply voltage must be turned off before any product components are open.

1-5 Danger relating to system pressure

DANGER! Centralized lubrication systems are under pressure during operation. The system should be depressurized before installation, repair, and maintenance.

2. Transportation, Delivery and Storage

2.1 Transportation

Our products must be transported with care. Products must be protected against impacts.

2.2 Receipt Inspection

The products must be inspected if any damage occurs. Keep the packaging material until the inspector makes sure there is no discrepancy.

2.3 Storage

Storage conditions are listed as below,

☐Storage Environment is a dry, dust-free, and well ventilated area
☐Max. Storage time 12 months
☐Permitted Air Humidity is below 60%
☐Warehouse Temperature range is between 10°C to 40°C
☐Sun light and UV radiation need to be avoided.

General Storage Information
☐Well package to avoid dust, corrosion, and damage before storage
☐Well locate on racks or pallets
☐Permitted Air Humidity is below 60%
☐Transmission mechanism needs to avoid impacts

3. Operation

3.1 Safety Information

3.1.1 Before Installation

☐Ensure the wiring of cables and supplied power is correct before installation

☐Trico Corporation centralized lubrication systems are designed for the mechanism lubrication **ONLY**.

3-1.2 Shutdown

□**ONLY** qualified personnel is authorized to repair Trico Corporation centralized lubrication systems by original Trico Corporation spare parts.

3-2 Parts of lubricator (PE-6003)

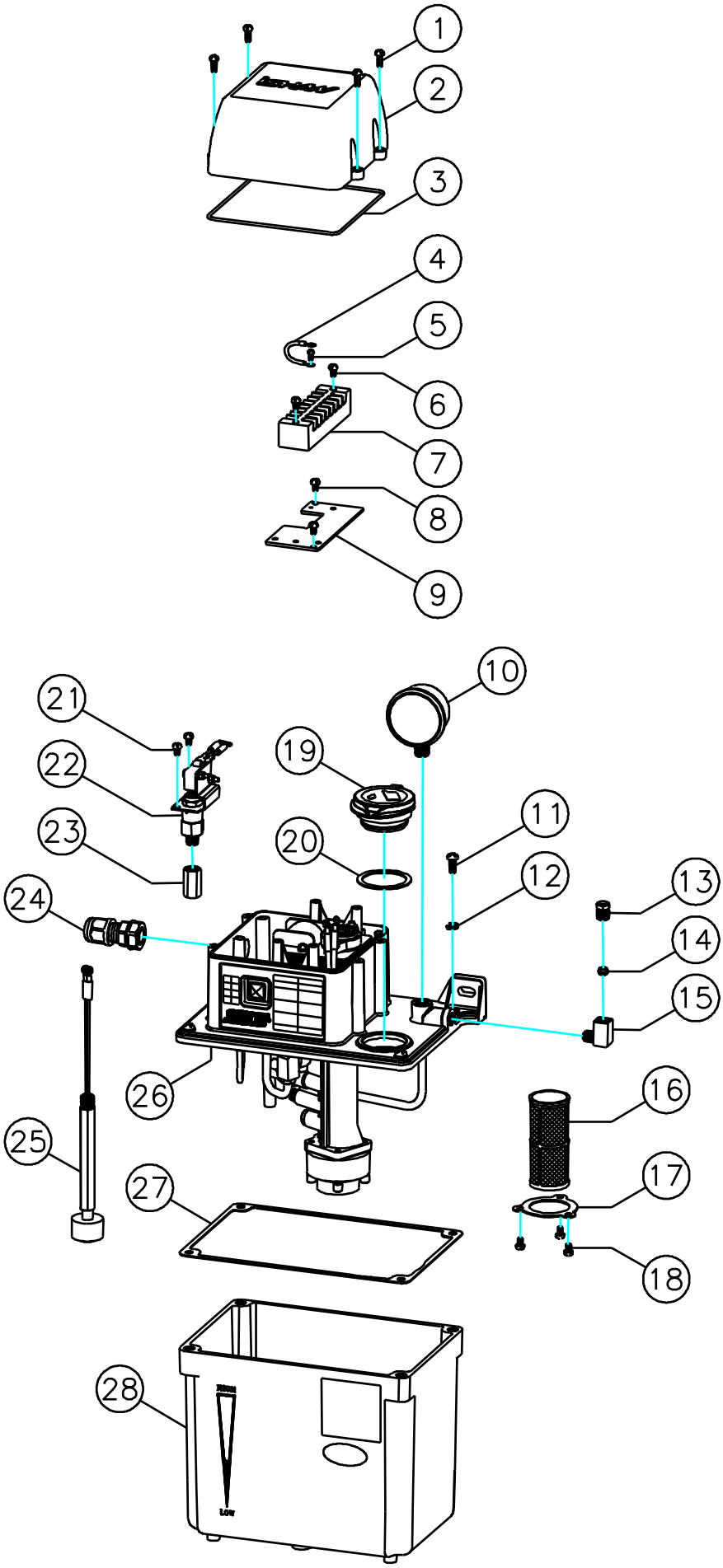

No.	Description
1	Philips screw M4*P0.7*10L
2	Top cover of electronic box
3	O-ring Ø2*Ø129.5 (S130)
4	Wiring(yellow/green)set-CE grounding 130L
5	Philips screw M3*P0.5*10L
6	Philips screw M4*P0.7*10L
7	Terminal plate 8P
8	Philips screw M4*P0.7*6L
9	Fixing plate for terminal plate
10	Pressure gauge 35kg*PT1/8*1.5" (kg/MPa)
11	Philips screw M5*P0.8*12L
12	Spring washer Ø5
13	Compression bushing Ø4 Compression bushing Ø6
14	Compression sleeve Ø4 Compression sleeve Ø6
15	Straight adaptor Ø4*1/8 Straight adaptor Ø6*1/8
16	Inlet filter (60 mesh)
17	Fixing sheet for inlet filter
18	Philips screw M4*P0.7*6L
19	Set of tank-cap
20	Seal of tank-cap
21	Philips screw M4*P0.7*10L
22	Pressure switch 12-9kg (for PE-60,70,80 series)
23	Connector Ø6XPS1/8
24	Cable gland(black) Ø22
25	Set of float switch
26	Upper module of PE-6003 (110V). Upper module of PE-6003 (220V).
27	Packing for oil tank 3L
28	PE-6003 oil tank with stickers

Parts of lubricator (PE-7008)

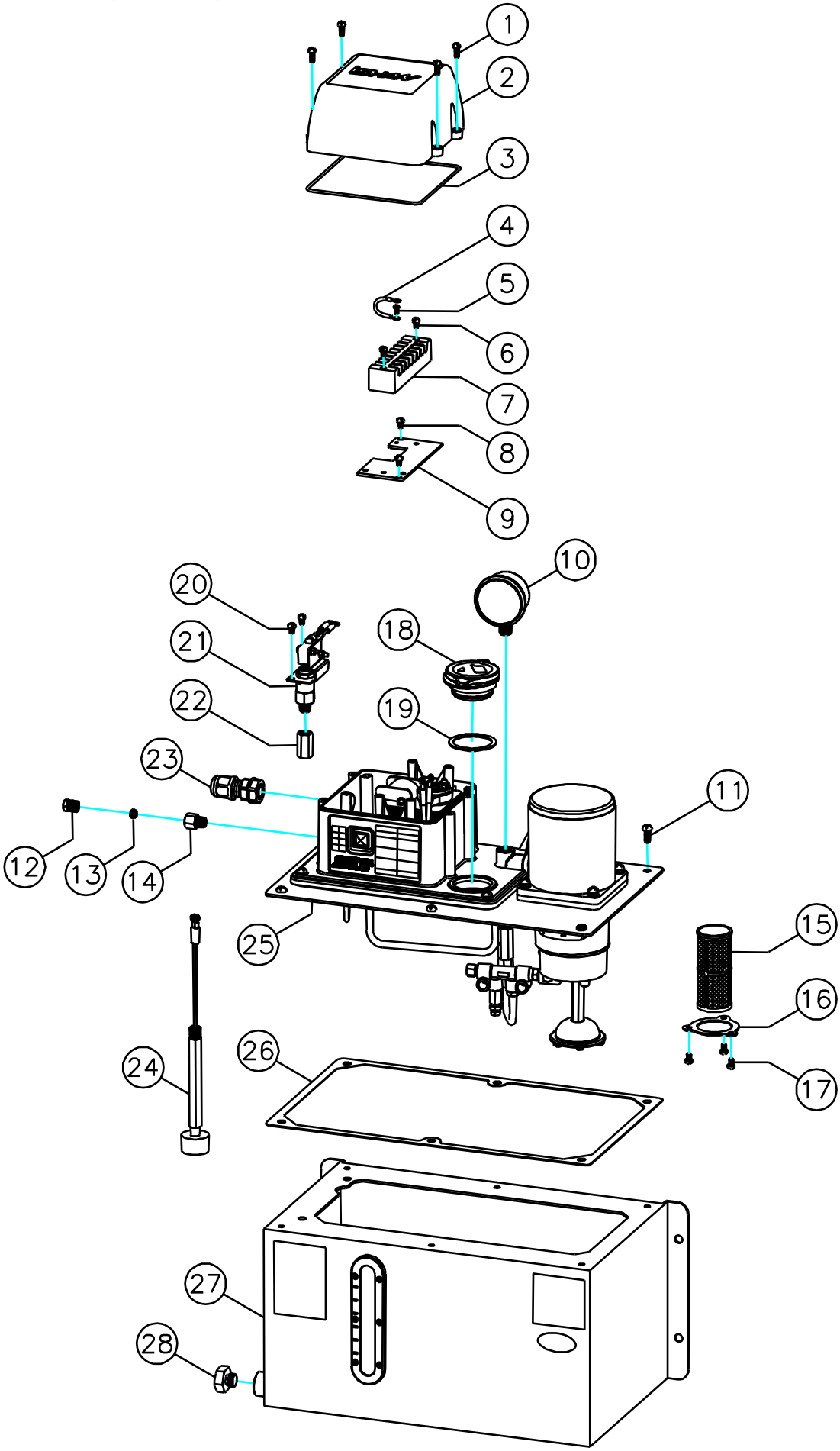

No.	Description
1	Philips screw M4*P0.7*10L
2	Top cover of electronic box
3	O-ring Ø2*Ø129.5 (S130)
4	Wiring(yellow/ green)set-CE grounding 130L
5	Philips screw M3*P0.5*10L
6	Philips screw M4*P0.7*10L
7	Terminal plate 8P
8	Philips screw M4*P0.7*6L
9	Fixing plate for terminal plate
10	Pressure gauge 35kg*PT1/8*1.5" (kg/MPa)
11	Philips screw M5*P0.8*12L
12	Compression Bushing Ø4 Compression Bushing Ø6
13	Compression Sleeve Ø4 Compression Sleeve Ø6
14	Straight adaptor Ø4*1/8 Straight adaptor Ø6*1/8
15	Inlet filter (60 mesh)
16	Fixing sheet for Inlet filter
17	Philips screw M4*P0.7*6L
18	Set of tank-cap
19	Seal of tank-cap
20	Philips screw M4*P0.7*10L
21	Pressure switch 12-9kg (for PE-60,70,80 series)
22	Connector Ø6XPS1/8
23	Cable gland(black) Ø22
24	Set of float switch
25	Upper Module of PE-7008(110V) Upper Module of PE-7008(220V)
26	Packing for oil tank (for 6L/8L)
27	PE-7008 oil tank with stickers
28	Plug set for oil discharge

Parts of lubricator (PE-8008)

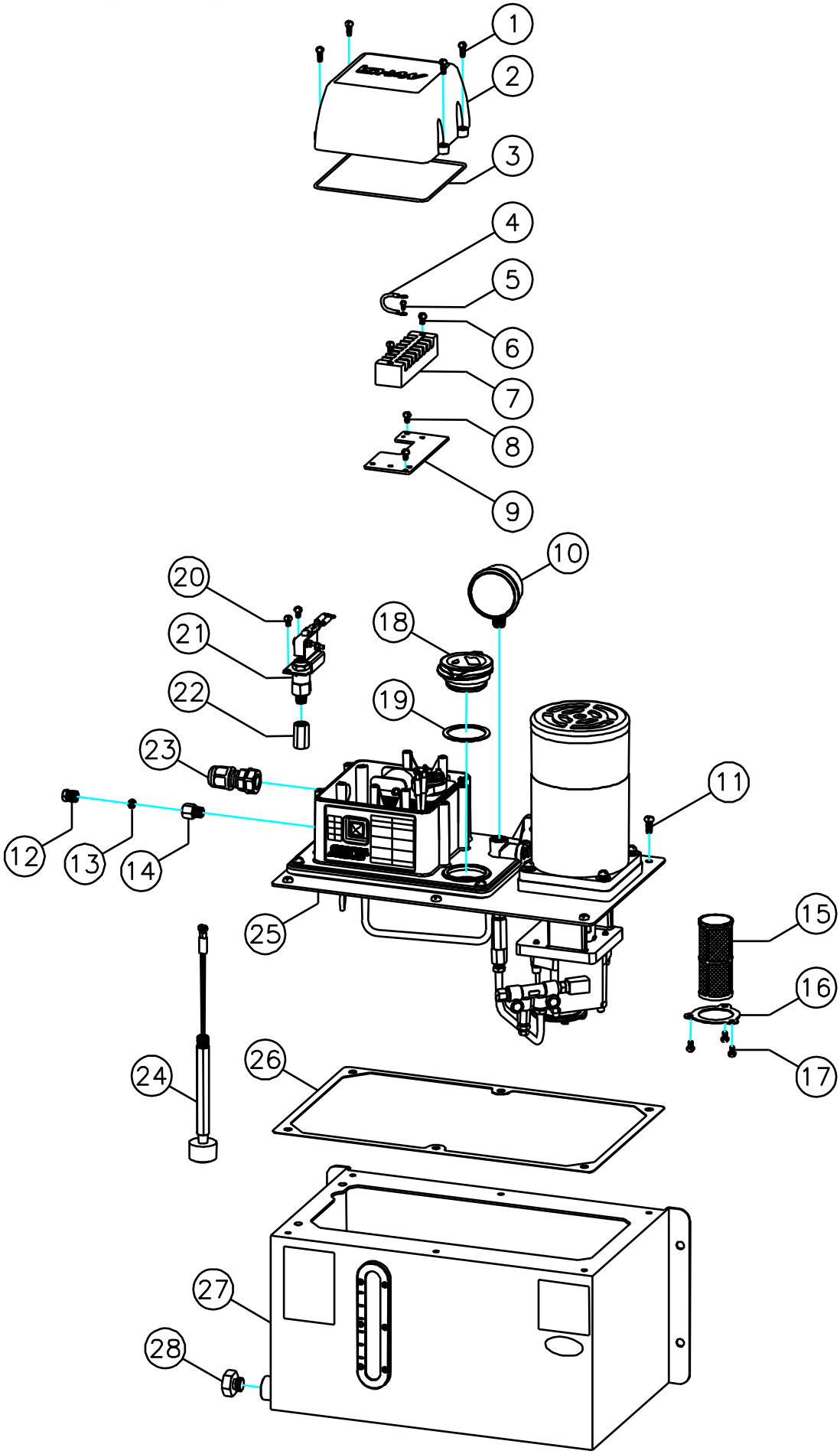

No.	Description
1	Philips screw M4*P0.7*10L
2	Top cover of electronic box
3	O ring Ø2*Ø129.5 (S130)
4	Wiring(yellow/ green) set-CE grounding 130L
5	Philips screw M3*P0.5*10L
6	Philips screw M4*P0.7*10L
7	Terminal plate 8P
8	Philips screw M4*P0.7*6L
9	Fixing plate for terminal plate
10	Pressure gauge 35kg*PT1/8*1.5" (kg/MPa)
11	Philips screw M5*P0.8*12L
12	Compression busing Ø4 Compression busing Ø6
13	Compression Sleeve Ø4 Compression Sleeve Ø6
14	Straight adaptor Ø4*1/8 Straight adaptor Ø6*1/8
15	Inlet filter (60 mush)
16	Fixing plate for inlet filter
17	Philips screw M4*P0.7*6L
18	Set of tank-cap
19	Seal of tank-cap
20	Philips screw M4*P0.7*10L
21	Pressure switch 12-9kg (for PE-60,70,80 series)
22	Connector Ø6XPS1/8
23	Cable gland(black) Ø22
24	Set of Float switch
25	Upper module of PE-8008(110V). Upper module of PE-8008 (220V).
26	Packing for oil tank (for 6L/8L)
27	PE-8008 oil tank with stickers
28	Plug set of oil discharge

3-3 Label

Label	Danger
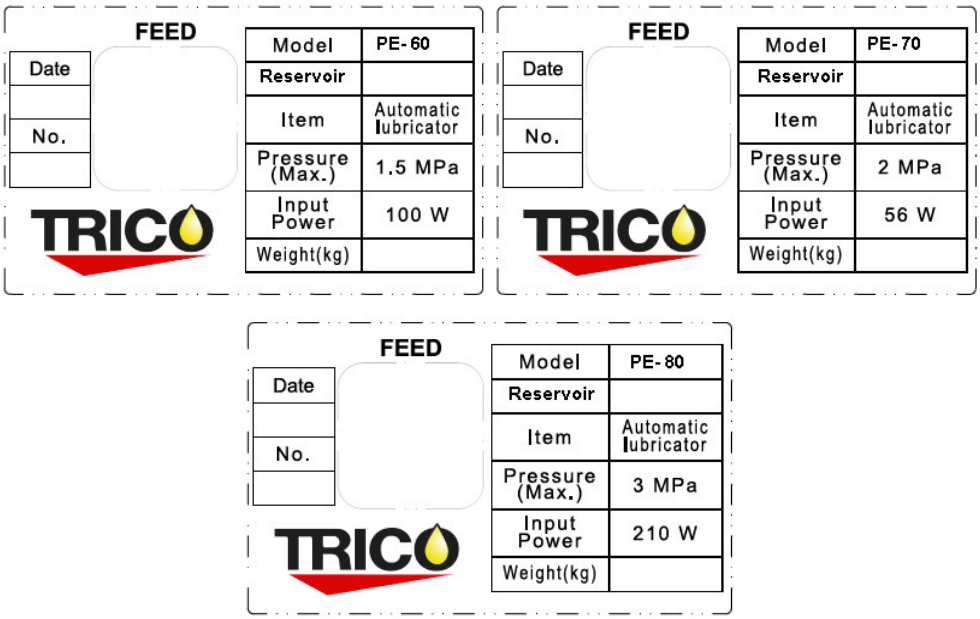	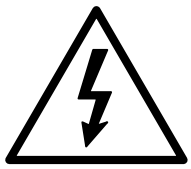
Right front side of control box	Outside of the electrical control box top cover

Wiring Diagram	Operation Notice (PE-60 Series)
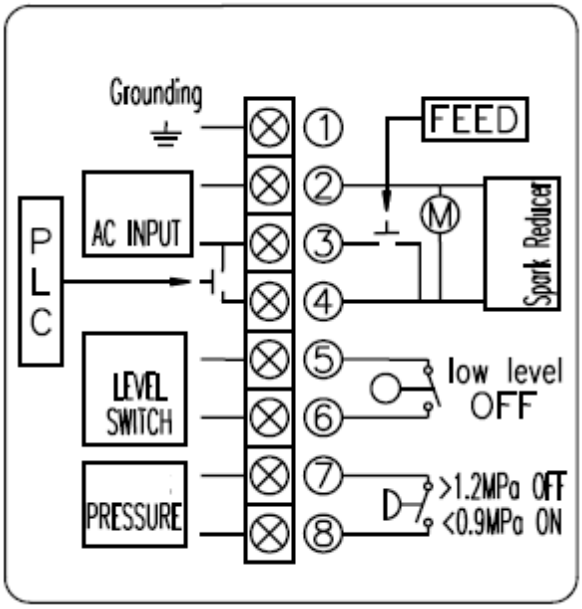	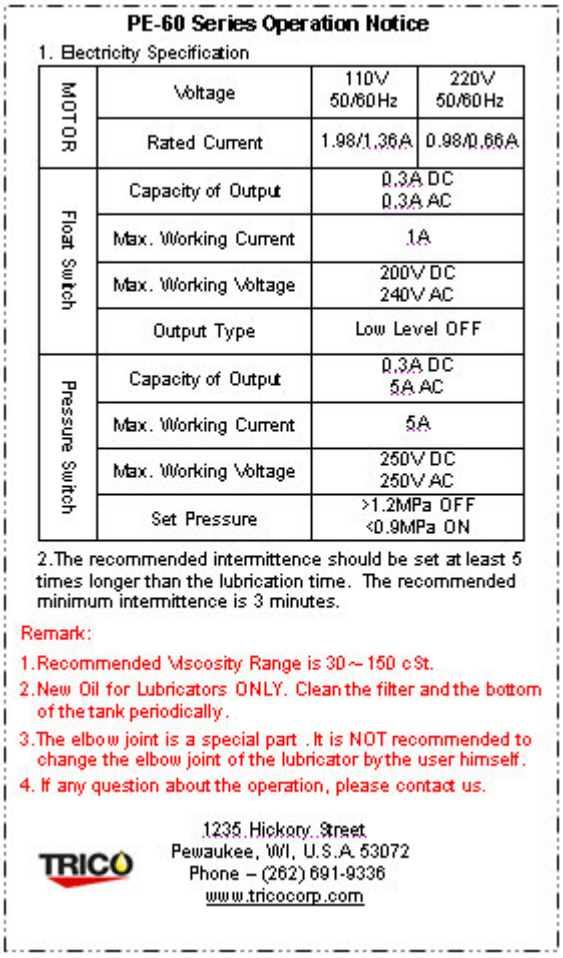
Inside of the electrical control box top cover	Left side of the oil tank

PE-60 Series Operation Notice

1. Electricity Specification

MOTOR	Voltage	110V 50/60Hz	220V 50/60Hz
	Rated Current	1.98/1.36A	0.98/0.66A
Float Switch	Capacity of Output	0.3A DC 0.3A AC	
	Max. Working Current	1A	
	Max. Working Voltage	200V DC 240V AC	
	Output Type	Low Level OFF	
Pressure Switch	Capacity of Output	0.3A DC 5A AC	
	Max. Working Current	5A	
	Max. Working Voltage	250V DC 250V AC	
	Set Pressure	>1.2MPa OFF <0.9MPa ON	

2.The recommended intermittence should be set at least 5 times longer than the lubrication time. The recommended minimum intermittence is 3 minutes.

Remark:

1.Recommended Viscosity Range is 30～150 cSt.

2.New Oil for Lubricators ONLY. Clean the filter and the bottom of the tank periodically.

3.The elbow joint is a special part . It is NOT recommended to change the elbow joint of the lubricator by the user himself.

4. If any question about the operation, please contact us.

TRICO
1235 Hickory Street
Pewaukee, WI, U.S.A 53072
Phone – (262) 691-9336
www.tricocorp.com

Notice	Notice
TRICO 1.Recommended Viscosity Range 30～250 cSt. 2.**New Oil for Lubricators ONLY**,Recycled Oil is prohibited. 3.Please keep the inside of the tank clean without pollution. (For PE-70, 80 Series)	TRICO 1.Recommended Viscosity Range 30～150 cSt. 2.**New Oil for Lubricators ONLY**,Recycled Oil is prohibited. 3.Please keep the inside of the tank clean without pollution. (For PE-60 Series)
Right front side of control box	Right front side of control box
Operation Notice (PE-70 Series)	Operation Notice (PE-80 Series)

PE-70 Series Operation Notice

1.Electricity Specification

MOTOR	Voltage	110V 50/60Hz	220V 50/60Hz
	Rated Current	0.7/0.63A	0.28/0.27A
Float Switch	Capacity of Output	0.3A DC 0.3A AC	
	Max. Working Current	1A	
	Max. Working Voltage	200V DC 240V AC	
	Output Type	Low Level OFF	
Pressure Switch	Capacity of Output	0.3A DC 5A AC	
	Max. Working Current	5A	
	Max. Working Voltage	250V DC 250V AC	
	Set Pressure	>1.2MPa OFF <0.9MPa ON	

2.The recommended intermittence should be set at least 5 times longer than the lubrication time. The recommended minimum intermittence is 3 minutes.

Remark:

1.Recommended Viscosity Range is 30～250 cSt.
2. New Oil for Lubricators ONLY. Clean the filter and the bottom of the tank periodically.
3.The elbow joint is a special part . It is NOT recommended to change the elbow joint of the lubricator by the user himself.
4. If any question about the operation, please contact us .

TRICO
1235 Hickory Street
Pewaukee, WI, U.S.A 53072
Phone – (262) 691-9336
www.tricocorp.com

PE-80 Series Operation Notice

1.Electricity Specification

MOTOR	Voltage	110V 50/60Hz	220V 50/60Hz
	Rated Current	1.74/1.84A	0.85/1A
Float Switch	Capacity of Output	0.3A DC 0.3A AC	
	Max. Working Current	1A	
	Max. Working Voltage	200V DC 240V AC	
	Output Type	Low Level OFF	
Pressure Switch	Capacity of Output	0.3A DC 5A AC	
	Max. Working Current	5A	
	Max. Working Voltage	250V DC 250V AC	
	Set Pressure	>1.2MPa OFF <0.9MPa ON	

2. The recommended intermittence should be set at least 5 times longer than the lubrication time. The recommended minimum intermittence is 3 minutes.

Remark

1.Recommended Viscosity Range is 30～250 cSt.
2. New Oil for Lubricators ONLY. Clean the filter and the bottom of the tank periodically.
3.The elbow joint is a special part . It is NOT recommended to change the elbow joint of the lubricator by the user himself.
4. If any question about the operation, please contact us .

TRICO
1235 Hickory Street
Pewaukee, WI, U.S.A 53072
Phone – (262) 691-9336
www.tricocorp.com

Left side of the oil tank	Left side of the oil tank

3-4 Installation

3-4.1 Mounting of the system

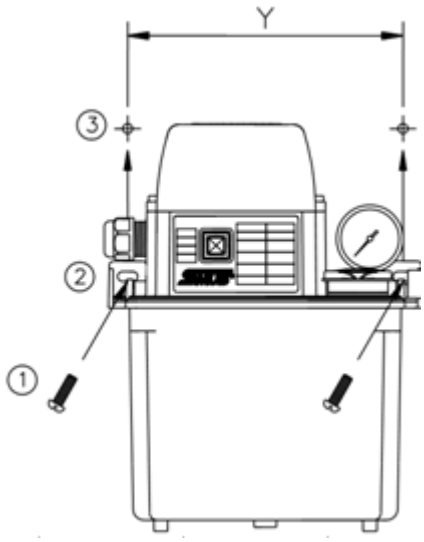

(Fig. B)

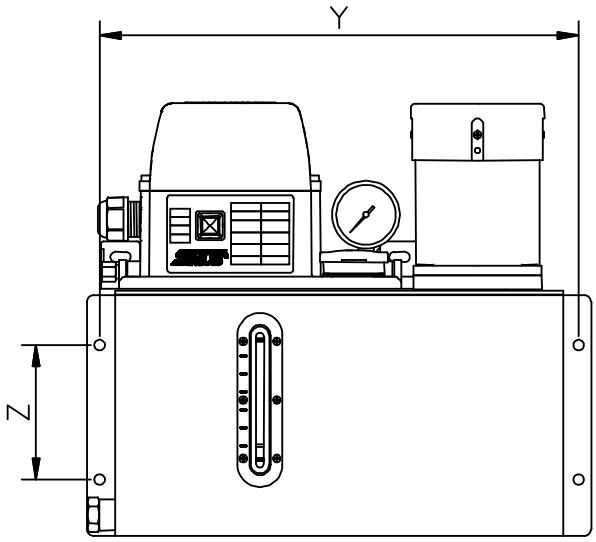

(Fig. C)

1. Mount the system on the machine fixing holes② by fastening it with two screws (M6)① at the upper lid holes ③。
2. The distance of machine fixing holes is Y and Z as below listed。

Model	Tank Capacity	Y	Z	Remark
PE-60 series	3L	190~205	N/A	(Fig. B)
PE-60 series	4L	232~284	N/A	(Fig. B)
PE-60, 70 series	6L	339	95	(Fig. C)
PE-70, 80 series	8L	339	95	(Fig. C)

3-4.2 Lubricant filling

Remove the oil tank cap and fill the tank with clean lubricant at the level of 80% of the tank height (Fig. D).

NOTE：

☐ Approved lubricant viscosity：

MODEL	Viscosity Range
PE-60 series	30~150cSt
PE-70 series	30~250cSt
PE-80 series	30~250cSt

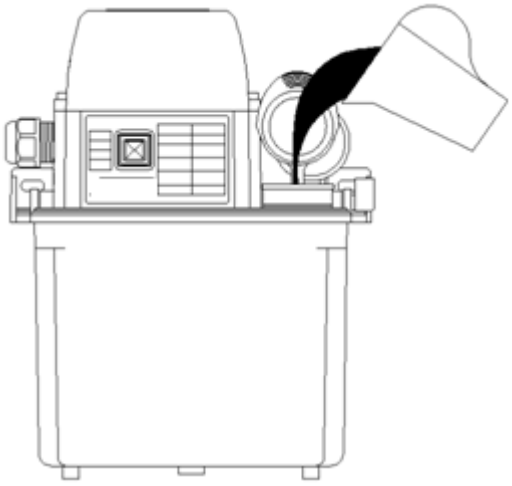

(Fig. D)

☐ Viscosity higher (lower) than recommended viscosity range may result the burn down (insufficient pressure) of the lubrication systems.

☐ Use new lubricant only.

3-4.3 Oil pipe connection (including related parts list)

PE-60 series parts list：

No.	Item	Specification	Q'ty
①	Compression bushing	Ø4	1
		Ø6	
②	Compression sleeve	Ø4	1
		Ø6	
③	Straight adaptor	Ø4×1/8	1
		Ø6×1/8	
④	Aluminum Pipe (Reference only)	Ø4	1
		Ø6	

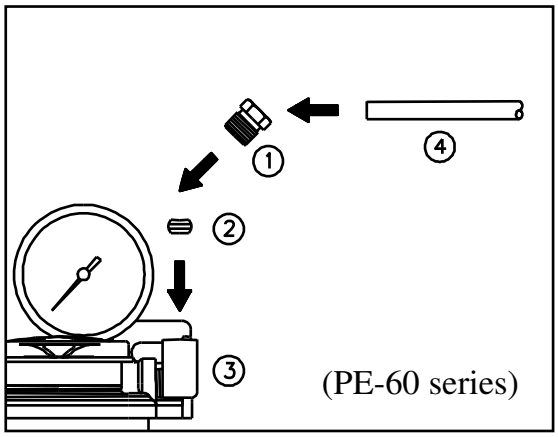

(Fig. E)

Operation：(Fig. E)

a. Check the parts first。
b. Remove the compression bushing① and compression sleeve② out of the outlet adaptor③.
c. Inset the end of the oil pipe into the compression bushing①and compression sleeve ② and connect with the outlet adaptor③
d. The overhead of the pipe④ after inserting the compression sleeve② needs more than 1mm.
e. Align and tighten the pipe④with the compression bushing①to avoid the leaking.
※If the pipe④ is loosen, remove the compression bushing①and compression

PE-70, PE-80 series parts list：

No.	Item	Specification	Q'ty
①	Compression bushing	Ø4	1
		Ø6	
②	Compression sleeve	Ø4	1
		Ø6	
③	Straight adaptor	Ø4×1/8	1
		Ø6×1/8	
④	Aluminum Pipe (Reference only)	Ø4	1
		Ø6	

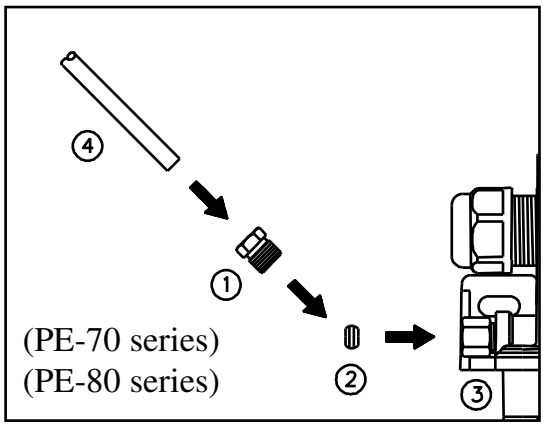

(Fig. F)

Operation：(Fig. F)

a. Check the parts first.
b. Remove the compression bushing① and compression sleeve② out of the outlet adaptor③.
c. Inset the end of the oil pipe into the compression bushing①and compression sleeve② and connect with the outlet adaptor③
d. The overhead of the pipe④ after inserting the compression sleeve② needs more than 1mm.
e. Align and tighten the pipe④ with the compression bushing① to avoid the leaking.
※If the pipe④ is loosen, remove the compression bushing① and compression sleeve② then connect the pipe again.

3-4.4 Installation of power and alarm

Note !! The installation of a fuse between the power supply and Trico Corporation centralized lubrication systems is strongly recommended !!

Operation：

Note !! Make sure the power cable is disconnected before the installation.

a. Remove the electrical control box cover of the electrical control box connection box (Fig. G).
b. Loosen the cable gland (Fig. H).
c. Insert the cable into the electrical control box through the cable gland hole (Fig. I).

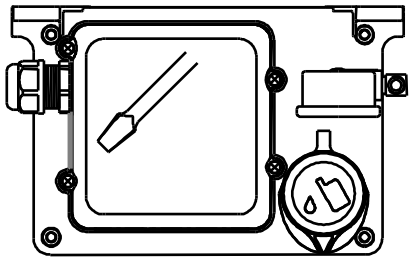

(Fig. G)

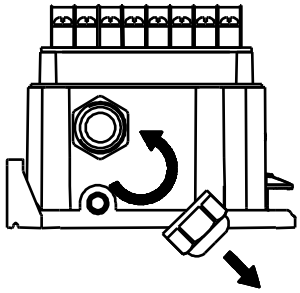

(Fig. H)

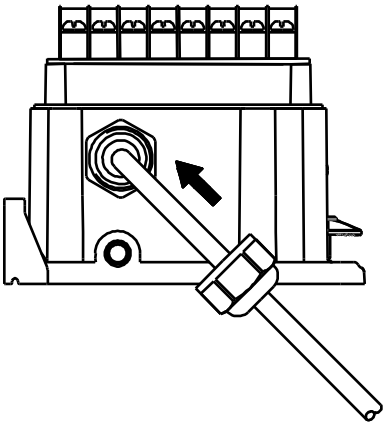

(Fig I)

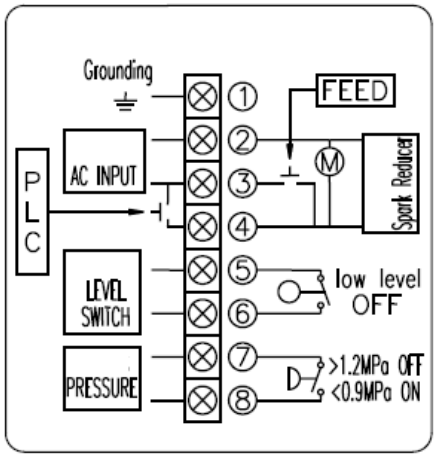

(Fig. J)

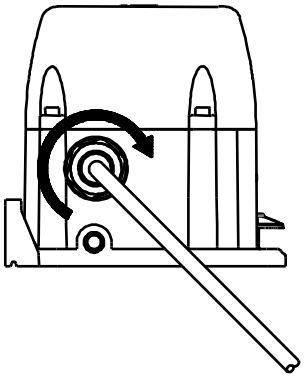

(Fig. K)

d.Connect the power cable as the wiring diagram (Fig. J), then connect the ground cable.

e. The function of float switch is to release the warning message to stop the machine when the lubricant is at the low level.

f. If you need interval lubrication function, the lubricator needs to manage ON/ OFF through timer function. It is controlled by an external controller.

g. Float switch terminals are available (Standard connection is at NC and COM).

h. Close the cover after connecting all cables.

i. To protect the cable from being pulled out of the box and disconnected from the ports, fasten the gland again (Fig. K).

j. Connect the lubricator with power supply properly and the lubricator will starts with operation.

4. Instruction

4-1 Operation

- ☐ If lubrication is needed during the intermittence, please push the FEED button.
- ☐ Make sure the power cable is disconnected before the installation or removal of the system. Turn ON the power after more than twenty seconds of turning OFF.
- ☐ The adaptor of the system for connecting the pipe is **without** one-way function for the system. It is prohibited for changing to non-original set-up to avoid malfunction.

Note !! The set-up of intermittent time needs to be above five times than lubrication time to prolong the life of the motor(the recommended minimum intermittent time is 3-minute).

4-2 Lubricant Filling

Always keep the oil level between the level of 30% and 80% of the tank height. Float switch will output signal when the remainder of the lubricant drops below the height if the float switch, and it is time to fill the tank. Remove the oil tank cap (Fig. D), you can fill the tank.

Attention! Recycled lubricant is **PROHIBITED**

5. Maintenance

Trico Corporation centralized lubrication systems are of low maintenance. However, related connection needs to be reviewed if properly fitted to secure the proper function of the system. Please clean periodically the oil tank of Trico Corporation centralized lubrications. If the user wants to clean the tank, please **TURN OFF** the system first and remove the bolts on the tank to separate the tank for cleaning. After cleaning the tank, please fasten the bolts to fix the tank.

Please follow below requirements,

- ☐ Restart the lubricator after 20 sec. of turning off to stabilize the performance of the lubricator.
- ☐ It is prohibited for changing to non-original set-up to avoid malfunction.
- ☐ The One-way adapter cannot be applied.

6 Faults

! Only original Trico Corporation centralized lubrication systems spare parts are used for Trico Corporation centralized lubrication systems. It is prohibited for changing to non-original spare parts.

! TURN OFF **the power before any checking or maintenance Faults / Fault finding**

Malfunction	Possible cause	Rectification
No lubricant is discharged from the system	Impermissible lubricant	Revised to the lubricant of suitable viscosity
	Float switch fails to work	Replace with a new float switch.
	Motor fails to work	1.Check if power cable is connected in mistake or incorrect power input.
		2. The repair needs to be done by authorized personnel.
	Insufficient lubricant	Refill the tank
Insufficient lubricant discharged	Oil suction set is blocked.	Clean the set
	Impermissible lubricant	Revised to the lubricant of suitable viscosity
Leaking at the connection of the pipe and the lubricator	Incorrect installation	The pipe must be inserted into the compression sleeve and at least 1mm over the end of the compression sleeve further into the adapter.
Motor runs but no lubricant is discharged from the system	※ After disassembling the outlet, checking if the lubricant is discharged.	
	If **YES**, the piping could be blocked or leaking.	Find out and replace the part of the pipe in problem.
	If **NO**, the causes could be, 1. Gear pump is jammed 2. Motor is out of function	The repair needs to be done by authorized personnel.
Abnormal message is released	1. Piping leaks	1.Find out and replace the part of the pipe in problem.
	2. Motor is out of function	2. The repair needs to be done by authorized personnel.
	3. Gear pump is jammed	3. The repair needs to be done by authorized personnel.

Note: If the lubricator is sent to repair, please ensure the lubricant is completely removed to

protect the electronics from remainder of lubricant.

Working on products that have not been disconnected from the power supply can cause serious injury or death to persons. Installation, maintenance, and repair work may only be carried out by qualified experts on products that have been disconnected from the power supply. The supply voltage must be turned off before any product components are open.

7 Warranty

Trico Corporation centralized lubrication systems is under the warranty coverage at a period of 12 months. Material and manufacturing faults of is under the Trico Corporation coverage.

Below conditions applied Trico Corporation centralized lubrication systems on are beyond the warranty,

- ☐Incorrect operation
- ☐Incorrect installation
- ☐Impermissible lubricant
- ☐Incorrect maintenance
- ☐Non-original spare parts are used
- ☐Unauthorized modification on the system
- ☐Not in accordance with transportation and storage requirements

8. Remarks

Trico Corporation reserves the right to make content and technical changes. Above contents are subject to change without prior notice!

9. Technical data

9-1 Specification

Model	PE-6003	PE-6004	PE-6006
Voltage (Single Phase)	110V or 220V		
Consumption Power (W)	100		
Capacity of Terminal Output (A)	0.3(Float switch) 5(Pressure switch)		
Lubrication time	Cooperate with PLC control system		
Intermittent Time	Cooperate with PLC control system		
Output Bore	Ø4 or Ø6		
Max. Output Pressure(MPa)	1.5		
Output Volume (cc/min)	150		
Pressure Release device	○		
Float Switch	○		
Pressure Switch (MPa)	1.2-0.9(NC)		
Pressure Gauge	○		
Alarm Beeper	X		
Tank Capacity	3L	4L	6L
Measurement (mm) (L×W×H)	230x145x291	308x180x300	357x207x279

Model	PE-7006	PE-7008
Voltage (Single Phase)	110V or 220V	
Consumption Power (W)	56	
Capacity of Terminal Output (A)	0.3(Float switch) 5(Pressure switch)	
Lubrication time	Cooperate with PLC control system	
Intermittent Time	Cooperate with PLC control system	
Output Bore	Ø4 or Ø6	
Max. Output Pressure(MPa)	2	
Output Volume (cc/min)	150	
Pressure Release device	○	
Float Switch	○	
Pressure Switch (MPa)	1.2-0.9(NC)	
Pressure Gauge	○	
Alarm Beeper	X	
Tank Capacity	6L	8L
Measurement (mm) (L×W×H)	357x207x290	357x207x307

Model	PE-8008
Voltage (Single Phase)	110V or 220V
Consumption Power (W)	210
Capacity of Terminal Output (A)	0.3(Float switch) 5(Pressure switch)
Lubrication time	Cooperate with PLC control system
Intermittent Time	Cooperate with PLC control system
Output Bore	Ø4 or Ø6
Max. Output Pressure(MPa)	3
Output Volume (cc/min)	600
Pressure Release device	○
Float Switch	○
Pressure Switch (MPa)	1.2-0.9(NC)
Pressure Gauge	○
Alarm Beeper	X
Tank Capacity	8L
Measurement (mm) (L×W×H)	357x207x307

9-2 Diagram

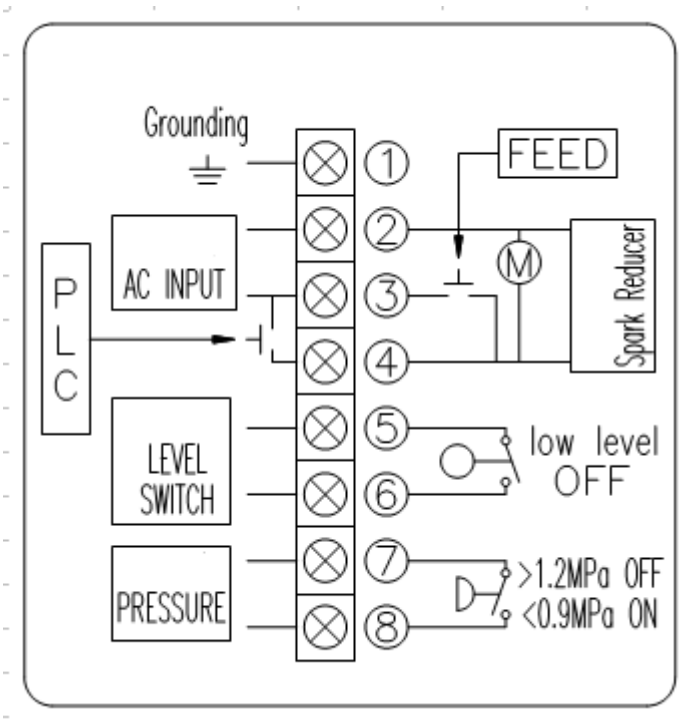

9-3 Flow circuit diagram

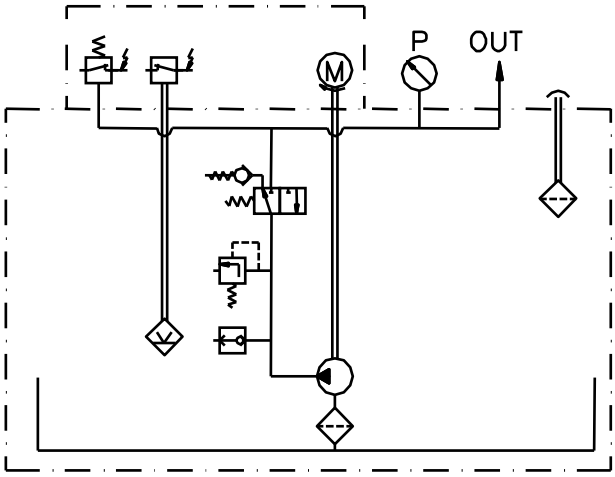

(PE-60 series)

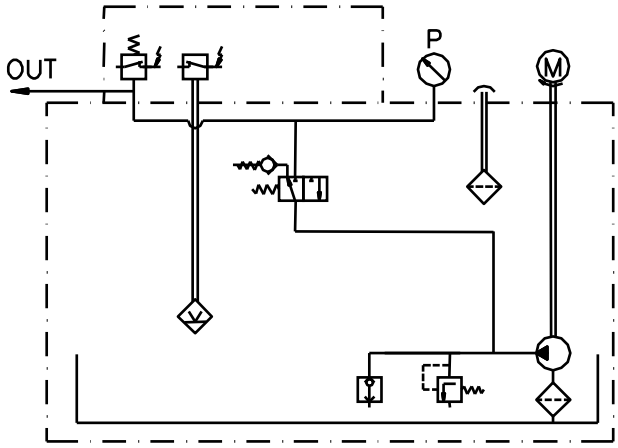

(PE-70, PE-80 series)