Preventing excessive lubrication in oil sump applications.

Lubricator location, viscosity of oil, equipment operation, and temperature can all have an effect on proper lubrication amounts in equipment. It is important to understand proper application of Trico products to help reduce the chances of excessive lubrication in equipment. Although proper use can reduce excessive lubrication, other factors can have an effect.

Lubricator Location

This can have an effect on how a constant level lubricator dispenses oil. The recommended placement is on the side of the equipment facing the direction of shaft rotation at the bottom when using the side mount of the lubricator (Fig. 1). Using the bottom fitting of the lubricator, and connecting to the bottom of the equipment sump will eliminate or minimize this problem (Fig. 2).

Viscosity of Oil

Higher viscosity lubricants feed differently than lower viscosity lubricants. Use of synthetics or mineral oils can also vary. Excessively high or low operating temperatures can also cause the lubricator to fill improperly. When equipment vibration is a concern, check lubricator setting against actual lubricant level in equipment. If level is too high, adjust lubricator to a lower setting. The excessive lubricant must be drained. Simply lowering the level setting will not lower the lubricant level in the equipment.

Equipment Operation

Equipment used in non-steady state, such as irregular on/off use, can create lubricant turbulence in the sump of the equipment. This can cause the lubricator to overfill in side mount applications. Mounting the lubricator through the bottom of the equipment should eliminate this condition. If this is not possible, mount the lubricator on the side of the equipment facing the direction of shaft rotation at the bottom (Fig. 1).

Excessive Refilling of Reservoir

When removing or replacing a filled reservoir on the lower casting of the standard Opto-Matic®, oil will feed. Although this amount is minimal, frequent removal/replacement will result in higher lubricant levels in equipment. For example, with a sump capacity of 1 pint, removing and replacing the reservoir may increase the volume of 20W oil by 3%. Periodically verify proper lubricant levels to avoid over filling.

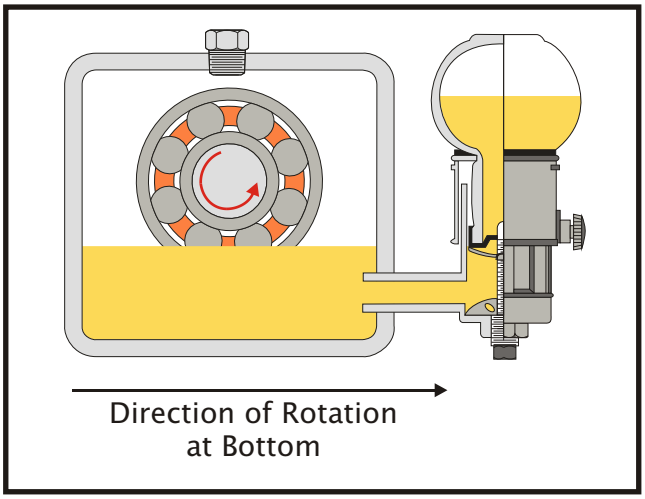

Fig. 1

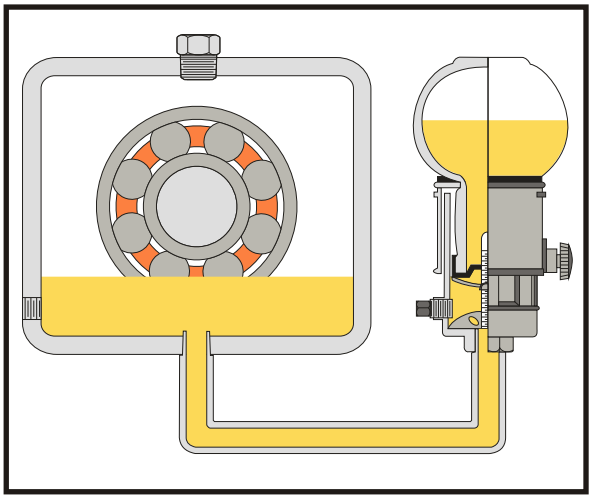

Fig. 2

Trico Mfg. Corp. • 1235 Hickory Street • Pewaukee, WI 53072
Phone: 262-691-9471 • Fax: 262-691-2576 • www.tricomfg.com